Project Design Document

1. Design Intent

The aim of GyroSight is to create an intuitive, gesture-based control experience where a user can operate a physical system through natural hand movements making the interaction feel smooth, responsive and almost like an extension of the body rather than relying on buttons or joysticks. It is designed for environments where **hands-free or remote interaction enhances control and engagement** such as surveillance, assistive systems or interactive installations. The project addresses the limitation of indirect and mechanical control interfaces by offering a more natural and direct method of interaction reducing complexity and making control more instinctive and immersive.

2. Inspiration & References

The project was inspired by superheroes like Iron Man and Doctor Strange who control systems through hand gestures creating a natural and immersive interaction. This idea was translated into a real-world system using existing technologies such as the Nintendo Wii Remote which uses motion sensing to control actions and the Leap Motion Controller which enables touchless gesture-based interaction with high precision. The use of sensors like the MPU6050 further reflects how real-world systems capture motion data for control.

From these references, key learnings were that **gesture-based interaction is more intuitive than traditional controls**, **real-time responsiveness is essential for a seamless experience** and **sensor data must be filtered and processed to reduce noise and improve stability**.

3. User Journey

1. The user holds the remote device in their hand
2. The system initializes and calibrates the motion sensor
3. The user begins tilting their hand
4. The system captures the motion and sends it wirelessly
5. The turret responds by moving in the same direction
6. The ultrasonic sensor continuously scans the environment
7. When an object is detected within range, the laser activates
8. The user adjusts movement based on feedback
9. The interaction continues as a real-time control loop

4. Success Criteria

Functional:

- Turret responds to gesture input within **1- 2 seconds**
- Servo movement accurately reflects hand tilt
- Ultrasonic sensor detects objects within defined range

User Experience:

- Control feels intuitive and smooth
- Minimal jitter or delay
- Easy to understand interaction without instructions

Reliability:

- Stable wireless communication between ESP32 devices
- Consistent performance over repeated use
- No random or unintended movements

5. System Overview

GyroSight is a **two-part system** consisting of a sender (remote) and a receiver (turret).

- The **sender** captures hand motion using a gyroscope (MPU6050) and transmits processed data wirelessly using ESP32
- The **receiver (second ESP)** interprets this data to control servo motors for turret movement
- An ultrasonic sensor adds environmental awareness
- A laser module provides visual feedback

6. High-Level Block Diagram

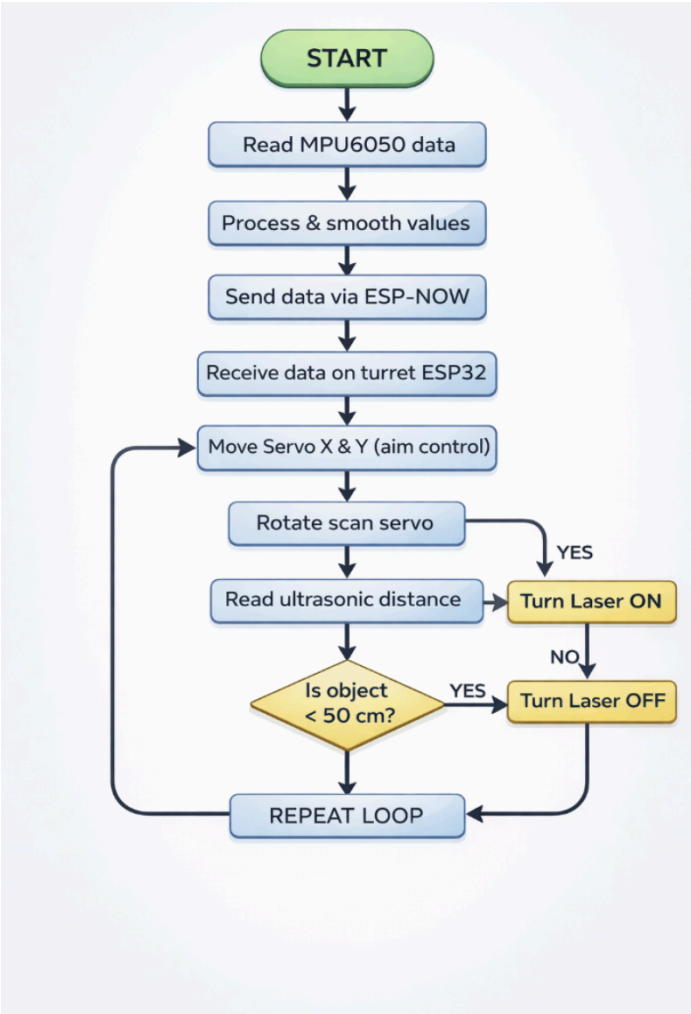

7. Input / Output Mapping

Input	Process	Output
Hand tilt (MPU6050)	Angle calculation & smoothing	Servo X & Y movement
Wireless signal	Data decoding	Turret positioning
Distance (Ultrasonic)	Threshold check (< 50 cm)	Laser ON/OFF

8. Sketches & Concepts

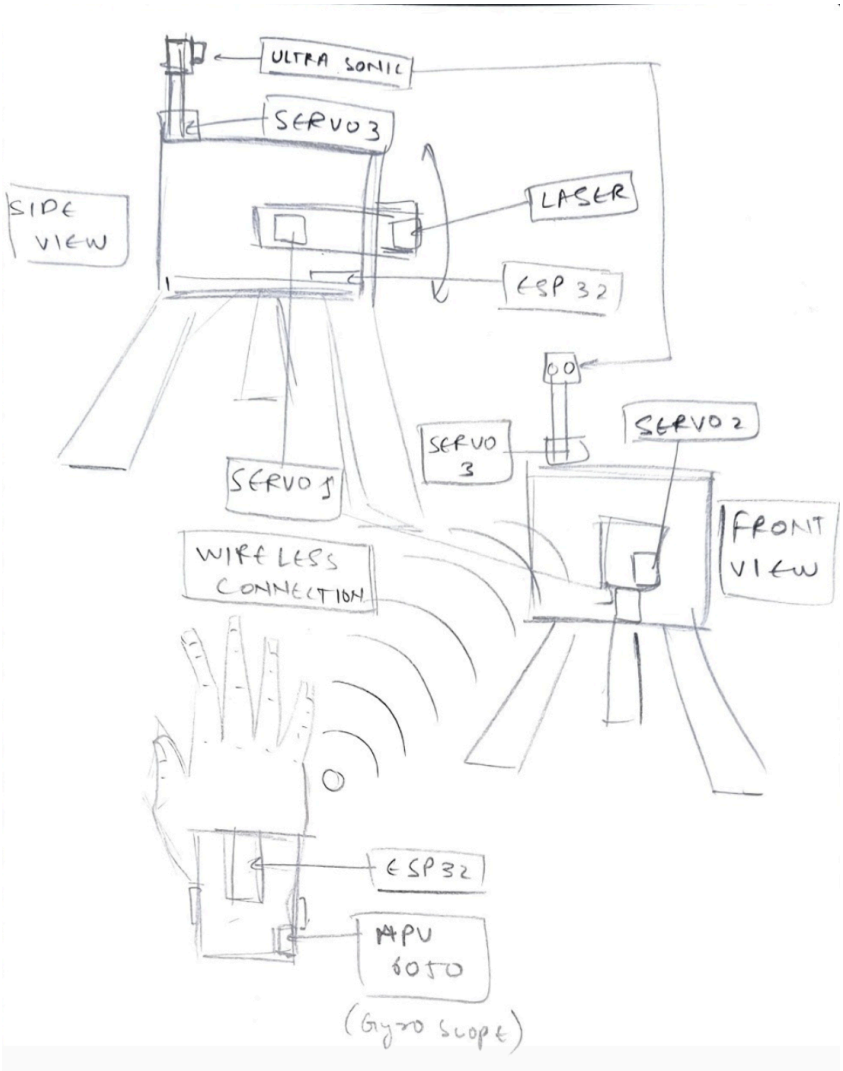

9. Final System Architecture (Labelled)

Left – Turret
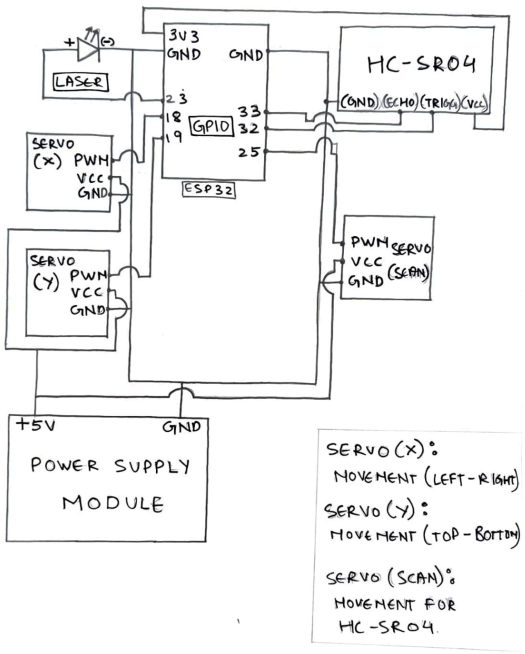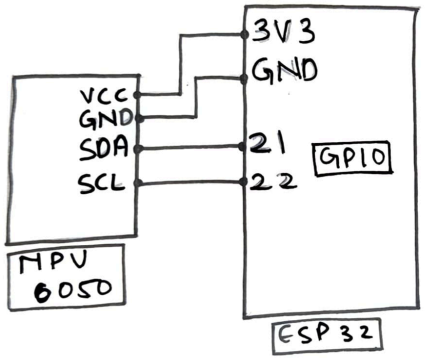
Right - Controller